Dmed® **isis LED** 10 C

TECHNICAL DATA — TREATMENT LIGHTS

FITTED WITH	1 x LED lamp
LUMINOUS POWER	42 000 Lux / 1.0 m *
ILLUMINANCEFIELD1,0 M	Ø 18 cm *
COLOR RENDERING INDEX (CRI)	> 95
COLOUR TEMPERATUR	4300 K *
DEPTH OF ILLUMINATION L1+L2	1.47 m
WORK EQUIPMENT	electronic converter
CONNECTED LOAD	220-240V; 50/60Hz
MAINS LEAD	direct power supply
LUMINAIRE BODY	polycarbonate & acrylonitrile butadiene styrene copolymer (PC & ABS)
WEIGHT (NET)	12.0 kg
POWER CONSUMPTION	16 W
USAGE	rocker switch (I/0), 2-stages rocker switch (60/100 %)
BALANCE OF ARTICULATION JOINTS	spring (weight compensation)
CLASS OF PROTECTION	I
ACCESSORY	sterilizable handle, adapter for suspended ceiling
NORMS	EN 60601-1, EN 60601-2-41
ROOM HEIGHT	230 cm, ceiling clearance 30 cm
SPECIAL FEATURES	without grip, maintenance free
FASTENING	ceiling mount, intermediate ceiling adapter (on request)
SYSTEM OF PROTECTION	IP 40
ORDER NUMBER	D15477000 - pure white

LIGHT DISTRIBUTION — TECHNICAL DRAWING

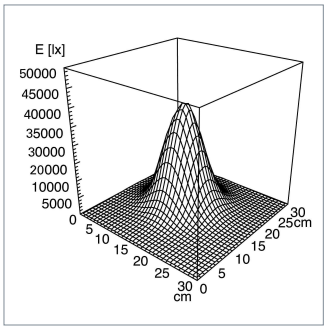

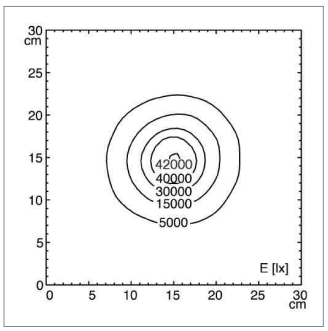

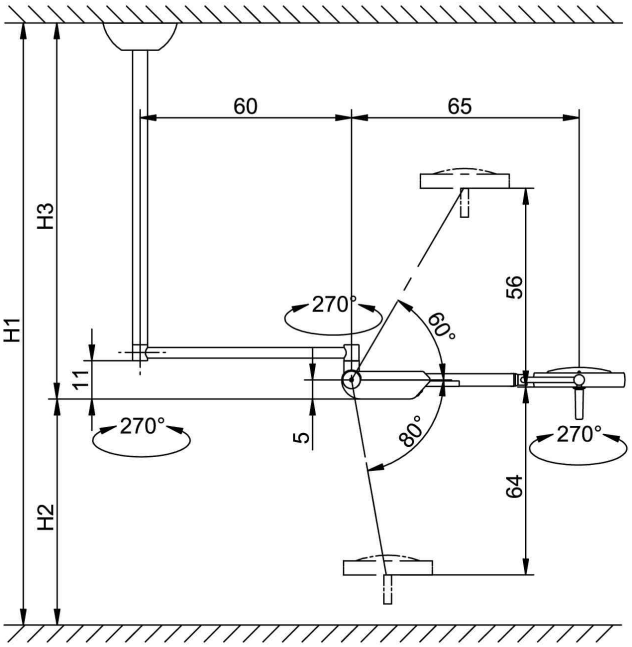

* -10% / +20% tolerance